15 Installing Feeders

About This Chapter

The feeder installation procedure includes routing feeders, installing feeder grounding kits, and leading feeders into the equipment room.

1. 15.1 Routing Feeders
   This part describes how to route feeders.
2. 15.2 Installing Feeder Grounding Kits
   This part describes how to install feeder grounding kits. The feeder grounding kits are installed when you route the feeders.
3. 15.3 Leading Feeders into the Equipment Room
   The feeders should be led into the equipment room through the feeder window. This part describes how to lead the feeders into the equipment room through the 12-hole feeder window.

15.1 Routing Feeders

This part describes how to route feeders.

Context

- The minimum bending radius of the feeder should be 20 times larger than the feeder diameter.
- The feeders routed along the cable rack or cable ladder should not be crossed.
- The feeder clips should be used to fasten the feeders. There are three types of feeder clips: 1-for-1 feeder clip, 1-for-2 feeder clip, and 1-for-3 feeder clip. **Figure 15-1** shows a 1-for-1 feeder clip, and **Figure 15-2** shows a 1-for-3 feeder clip.

Figure 15-1 1-for-1 feeder clip

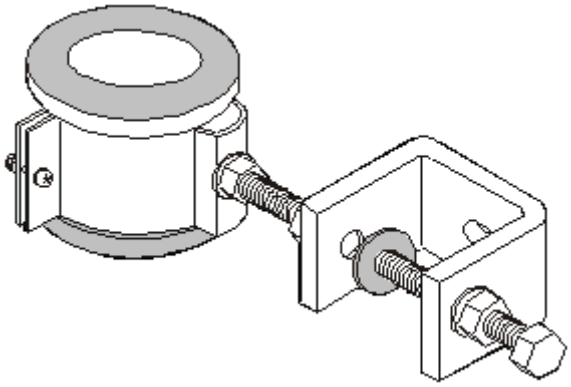

Figure 15-2 1-for-3 feeder clip

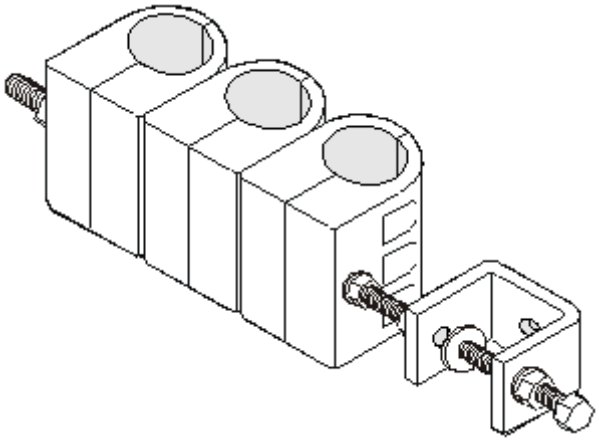

- If the feeders from the building top are led into the equipment room and the length of the feeders on the wall is greater than 1 m, it is recommended to route the feeders along the cable ladder.

NOTE

The feeder routing should be properly planned. The feeder routing should not occupy too much space or affect the ambient environment.

Procedure

Step 1 Cut the feeders and attach the temporary labels.

NOTE

You can either cut feeders before hoisting them to the installation position or reserve enough length and cut them after hoisting them to the right position.

1. Determine the length of the feeders required for each sector according to the engineering designs.
2. Leave an extra length of 1 m to 2 m for later use.

CAUTION

When cutting the feeders, avoid bending them and prevent them from being run over by vehicles or stepped on by pedestrians.

3. Attach temporary labels to both ends and the middle of the feeders after cutting each one.

NOTE

The content on temporary labels can be the same as that on the engineering labels.

Step 2 Hoist and fasten the feeders.

CAUTION

Hoist the feeder carefully to avoid scratching or damaging the feeder sheath.

1. Wrap the prepared feeder connectors with a piece of gunny cloth or an antistatic bag. Use a rope or cable tie to bind the cloth.
2. Knot the lifting rope round the feeder at the point 0.4 m from the end and tie another knot at the point 4.4 m from the feeder end to prepare for the hoisting, as shown in **Figure 15-3**.

Figure 15-3 Protection treatment for the feeder connector (unit: mm)

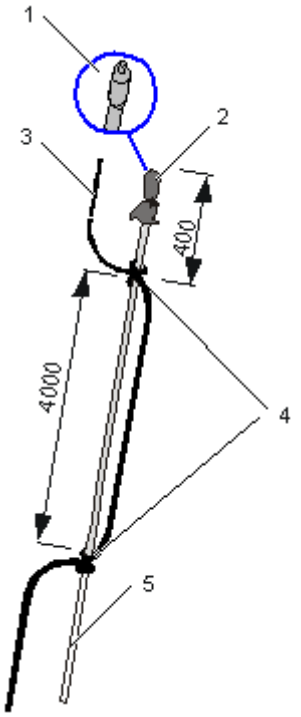

(1) Feeder connector (2) Wrapped connector (3) Lifting rope (4) Knot of the rope (5) Feeder

3. The installer under the tower pulls the rope when hoisting the antenna.

CAUTION

Prevent the feeders from bumping against the building or tower.

4. Fasten the upper end of the feeder in a proper position.

NOTE

Do not fasten the feeder at a point that is too close to the antenna or TMA.

Step 3 Route the feeders.

1. Arrange the feeders and make out the lead-in plan based on the sector requirements in the engineering design.

   Generally, the feeders for a sector are arranged in a row or a line and the sequence should be the same.

2. Arrange the feeders in the designed sequence.
3. Use feeder clips to fasten the feeders on the tower or cable rack while arranging the feeders in order. At the same time, perform the operations in **15.2 Installing Feeder Grounding Kits**.

CAUTION

- Lay the feeders from top to bottom and fasten them neatly using feeder clips.
- Determine the mounting points of the feeder clips according to the actual conditions. Mount the feeder clips at an interval of less than 2 m. Ensure that the feeder clips are evenly mounted and arranged in one direction.
- The feeder clips are vertical to the feeders. Feeders in the same clip are parallel to each other.
- When fastening feeders, do not fasten them until they are all laid neatly.

NOTE

Attach the label at:

- 20 cm from each feeder connector
- 20 cm to 30 cm under the tower platform
- 20 cm outdoors from the feeder window
- The point where the feeder is bent.

When binding labels to the feeders, ensure that all labels are neatly laid out and face the same direction. The cable ties should face the same direction, and an extra length of 5 mm to 10 mm should be left for the cable ties when you cut them.

4. Remove the temporary labels, and then use black cables ties to bind the feeder labels.

----End

Result

Figure 15-4 shows how to lay the feeders from the tower top to the feeder window.

Figure 15-4 Laying the feeders from the tower top to the feeder window

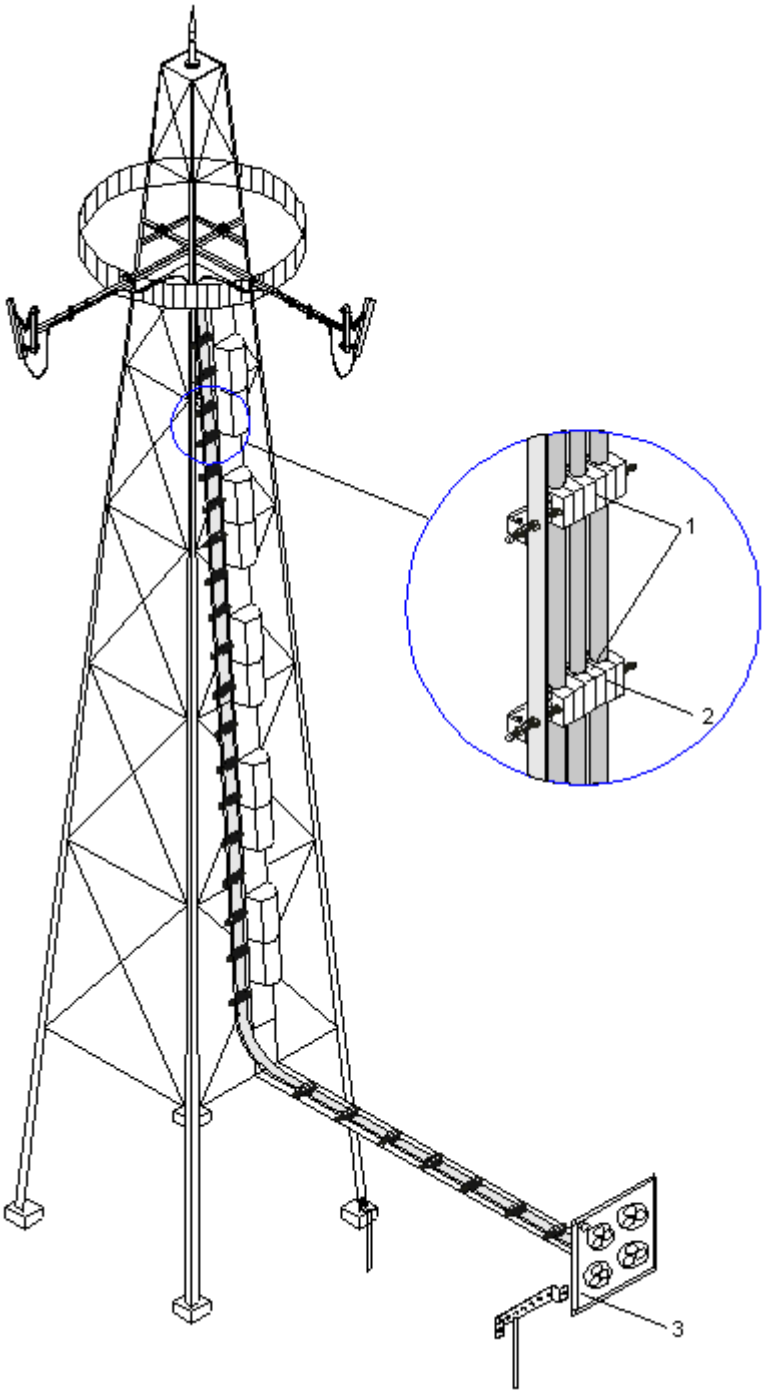

(1) Spacing between the feeder clips (2) Feeder clip (3) Feeder window

Figure 15-5 shows how to lay the feeders from the rooftop to the feeder window.

Figure 15-5 Laying the feeders from the rooftop to the feeder window

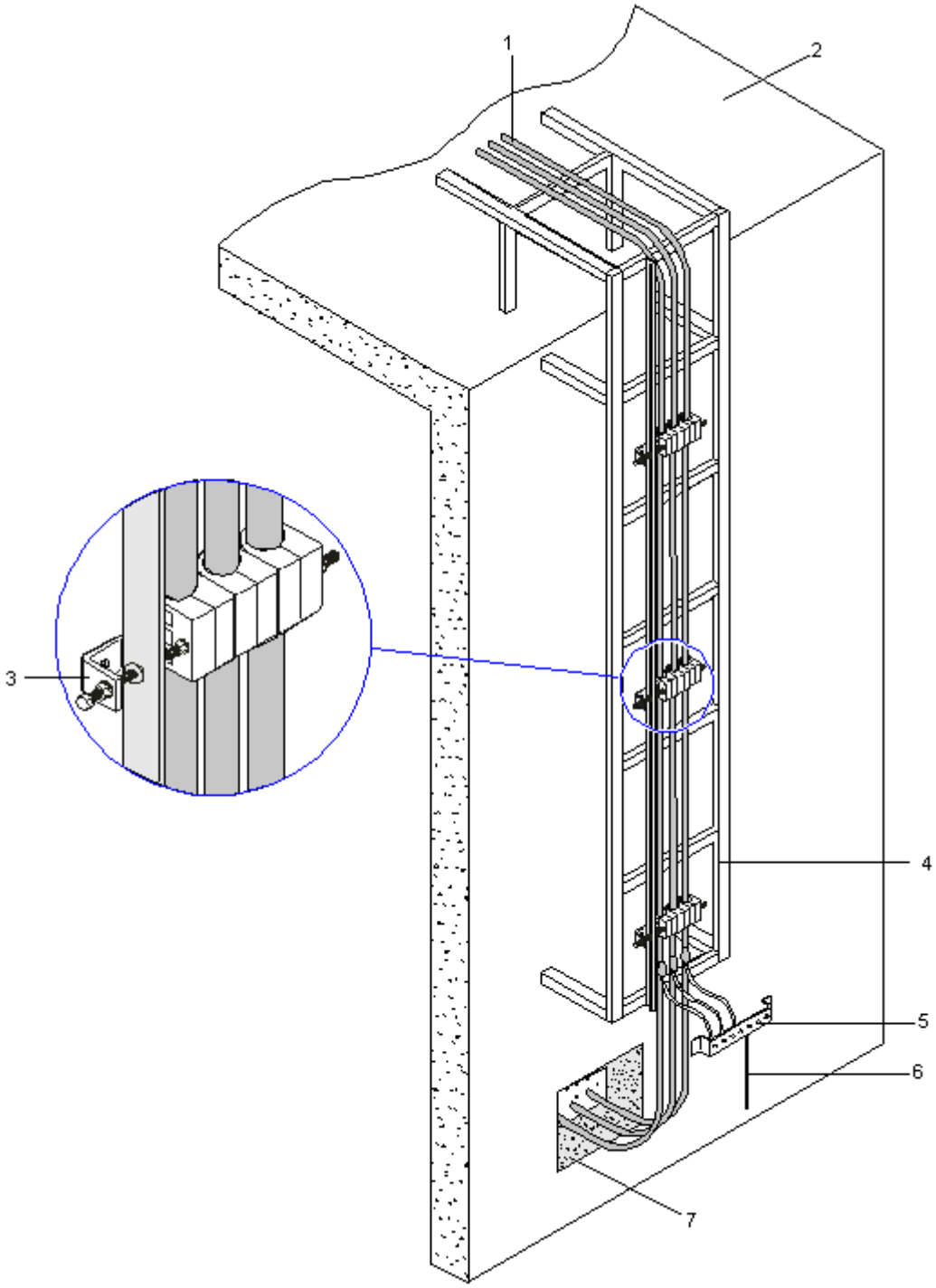

(1) Feeder (2) Rooftop (3) Feeder clip (4) Outdoor cable rack

(5) Outdoor grounding bar (6) To outdoor lightning protection ground (7) Feeder window

15.2 Installing Feeder Grounding Kits

This part describes how to install feeder grounding kits. The feeder grounding kits are installed when you route the feeders.

Prerequisite

The feeder grounding bar is installed and its position is lower than or of the same level as the feeder.

Procedure

Step 1 Keep the tools ready, unpack the packages of the feeder grounding kits, and then put all the parts and accessories at a clean place or on a piece of paper for later use.

Step 2 Determine the position for installing the feeder grounding kit by referring to **15.2.1 Grounding Locations of the Feeder Grounding Kits of the Mini Base Station** and **15.2.2 Grounding Locations of the Feeder Grounding Kits of the Macro Base Station**.

Step 3 Strip the outer layer off the feeder as described in steps 1 through 3 in **Figure 15-6**.

- Cut the feeder to the length of the feeder grounding kit.
- Cut the feeder to expose the conductor.

Figure 15-6 Installing the feeder grounding kits (a)

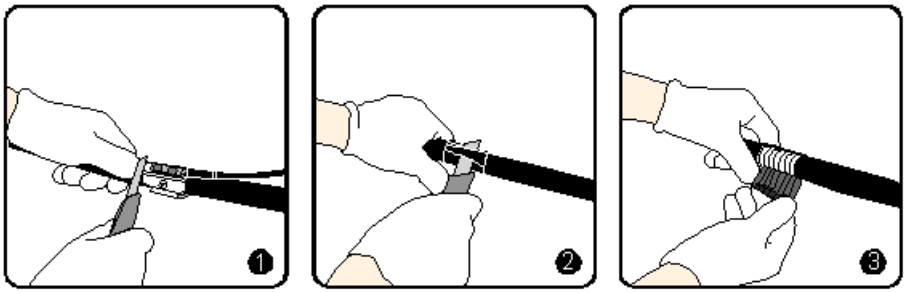

Step 4 Fasten the feeder grounding kit on the conductor of the feeder, as shown in steps 1 and 2 in **Figure 15-7**.

Figure 15-7 Installing the feeder grounding kits (b)

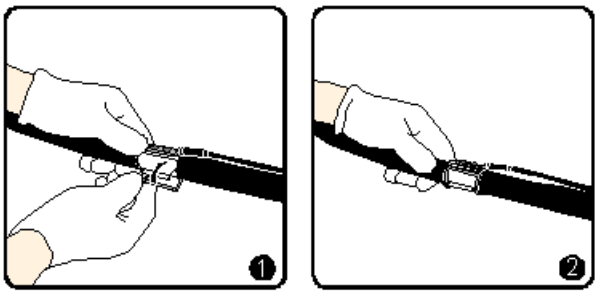

Step 5 Refer to **Waterproofing Outdoor Joints** to waterproof the outdoor joints on the feeder outer layer.

Step 6 Scrape the antirust paint on the grounding bar.

Step 7 Connect the grounding cable of the grounding kit to the closest grounding bar.

CAUTION

The angle between the feeders and the corresponding grounding cables should not exceed 15º.

Ground the feeder by adhering to the following principles:

- If the feeder is routed on the tower and there is space for the installation of the grounding kit on the tower, connect the grounding cable of the grounding kit directly to the nearest steel plate of the tower.
- If there is no space for the installation of the grounding kit on the tower, fasten the base of the grounding kit on the tower or the outdoor cable rack and then connect the grounding cable to the base.
- When laying feeders on the outdoor cable rack, connect the grounding cables to the well-grounded cable rack.
- Neatly lead the grounding cable of the feeder grounding kits to the outdoor grounding bar, as shown in **Figure 15-8**.
- If no outdoor grounding bar is available, connect the grounding cables to the well-grounded outdoor cable rack or to the grounding grid of the building, as shown in **Figure 15-9**.

Figure 15-8 Grounding before leading the feeder into the equipment room (with outdoor grounding bar)

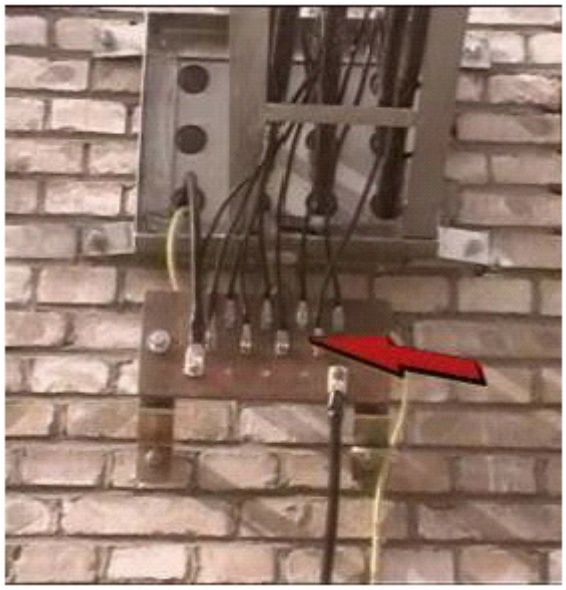

Figure 15-9 Grounding before leading the feeder into the equipment room (without outdoor grounding bar)

Step 8 Apply antirust paint around the grounding point.

Step 9 Exposed wires and lugs at the wiring terminals should be tightly wrapped up with insulating tapes.

----End

15.2.1 Grounding Locations of the Feeder Grounding Kits of the Mini Base Station

This part describes the grounding locations of the feeder grounding kits of mini base stations. The grounding locations depend on the installation modes of base stations.

Base Station and Antenna Mounted on a Pole

- When the length of the feeder is less than 5 m, no grounding is required for the feeder.
- When the length of the feeder is not less than 5 m, ground the outer shielding layer of the feeder at the nearest grounding point on the pole before connecting the feeder to the RF port on the base station.

Figure 15-10 shows the feeder grounding when the base station and the antenna are mounted on a pole.

Figure 15-10 Grounding locations of feeders between the base station and antennas mounted on a pole

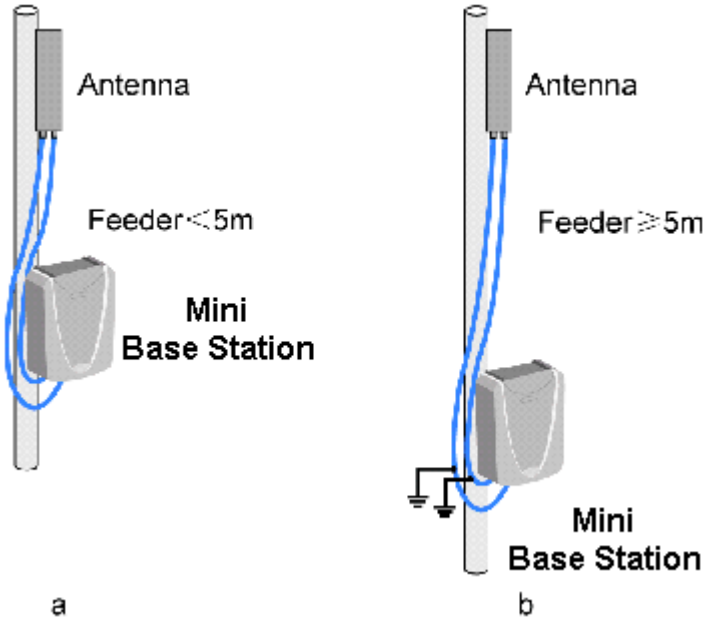

Base Station and Antenna Not Mounted on a Pole

- Ground the feeder at the bottom of the pole.
- Before connecting the feeder to the RF port of the base station, you need not ground the feeder if the distance between the base station and the point is less than 5 m. The point refers to the place where the feeder goes off the pole.
- Ground the outer shielding layer of the feeder if the distance between the base station and the point where the feeder is routed off the pole is more than 5 m.
- Ground the feeder at an interval of 20 m after it is routed off the pole.

Figure 15-11 shows the feeder grounding when the base station and the antenna are not mounted on a pole.

Figure 15-11 Grounding locations of feeders between the base station and antennas not mounted on a pole

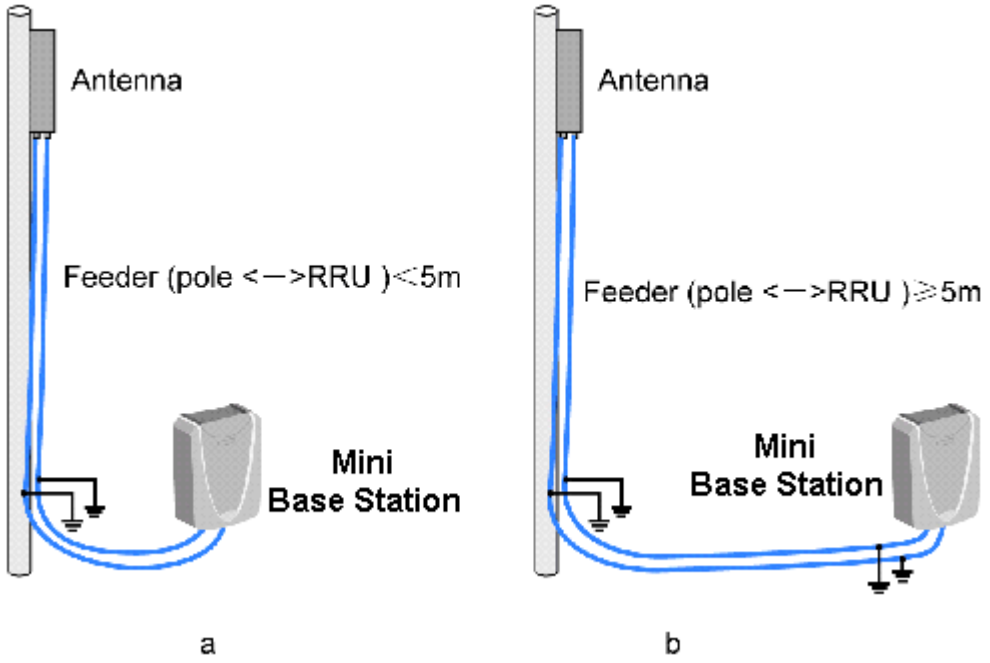

Base Station Mounted Outdoors

When the base station is mounted outdoors, for example, on a tower, billboard, chimney, or power tower, the requirements for feeder grounding are similar. The following describes how to ground the feeder when the base station is mounted on a tower.

- Ground the outer shielding layer of the feeder 0.5 m below the top of the antenna and 0.5 m above the point where the feeder is routed off the tower. The PGND cable of the feeder should be grounded to the tower body nearby. If the tower is higher than 60 m, ground the feeder in the middle of the tower.
- Do not ground the feeder if the distance between the base station and the point where the feeder is routed off the tower is not less than 5 m.
- Ground the outer shielding layer of the feeder if the distance between the base station and the point where the feeder is routed off the tower is more than 5 m.
- Ground the feeder at an interval of 20 m after it is routed off the tower.

Figure 15-12 shows the grounding of the feeder when the base station is mounted on a tower.

Figure 15-12 Feeder grounding for the base station mounted on a tower

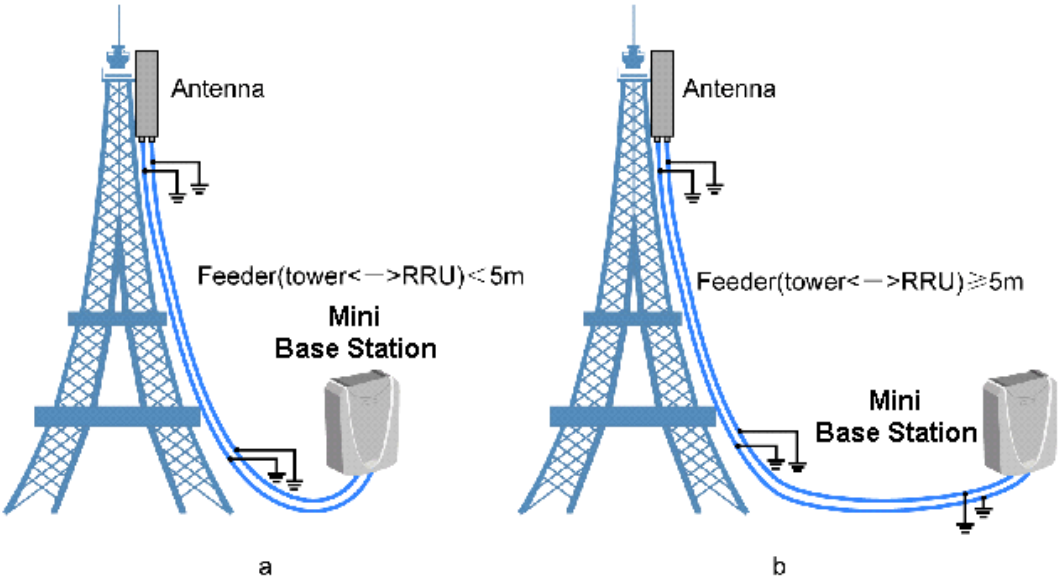

Base Station Mounted Indoors

- When the antenna of the base station and the feeder are mounted indoors, no grounding is required for the feeder.
- When most part of the feeder stays indoors and the antenna is installed outdoors, ground the outer shielding layer of the feeder near the feeder window.
- When most part of the feeder stays outdoors and the antenna is installed outdoors, ground the outer shielding layer of the feeder both at 0.5 m below the antenna and at the feeder window through which the feeder is led into the building. If the distance between the antenna bottom and the feeder window is less than 5 m, ground the feeder at only one point.

Figure 15-13 shows the grounding of the feeder when the base station is mounted indoors.

Figure 15-13 Feeder grounding for the base station mounted indoors

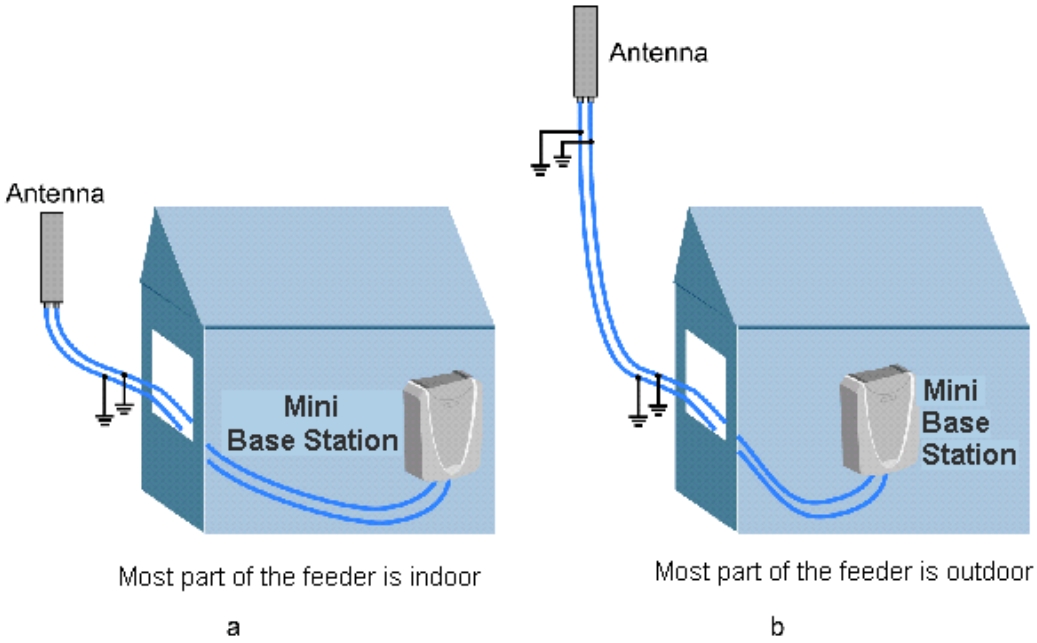

15.2.2 Grounding Locations of the Feeder Grounding Kits of the Macro Base Station

The feeder grounding kits are installed when you route the feeders. The grounding cable should use rubber insulated copper wires with cross-sectional area not less than 6 mm^2. The color of the grounding cable should be black or green and yellow.

Antenna on the Tower Platform

Ground the feeder at:

- The place where the feeder is led off the tower platform to the nearest tower body
- The place where the feeder is led out of the tower bottom to the nearest tower body
- The place where the feeder is led into the base station
  - For the outdoor base station, the feeder and the base station share a grounding bar.
  - For the indoor base station, ground the feeder to the nearest grounding bar outside the feeder window. When there is no grounding bar, ground the feeder to the grounding strap or cable rack.

When the length of the feeder distributed inside the tower exceeds 60 m, a grounding point should be added in the middle of the feeder. Generally, ground the feeder at an interval of 60 m. Ensure that the grounding points are evenly distributed on the feeder.

Figure 15-14 Grounding for the RF antenna mounted on the tower platform

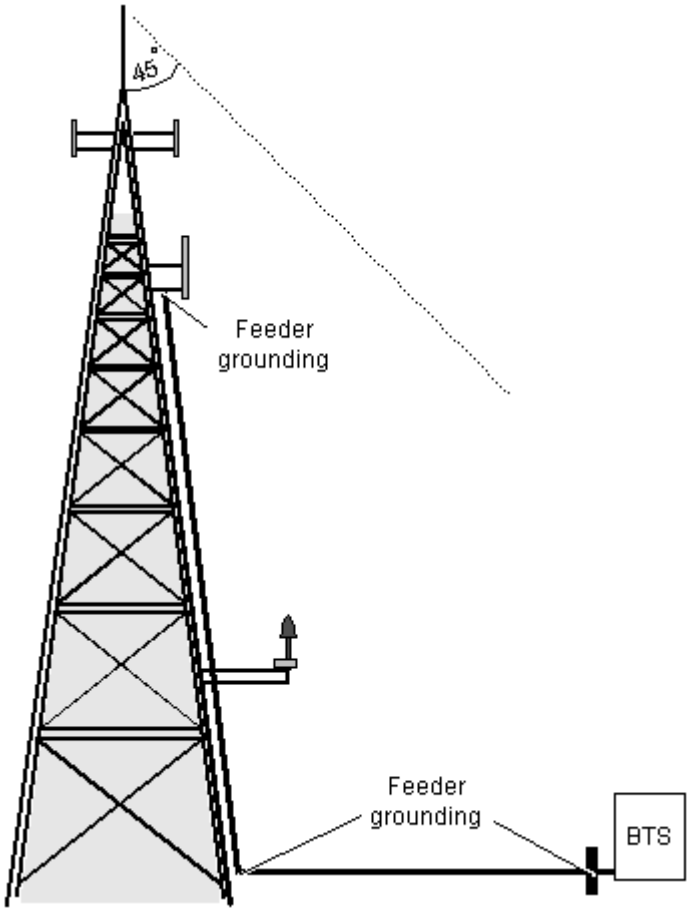

NOTE

The length of the grounding cable should not exceed 5 m.

Antenna mounted on the rooftop

Ground the feeder at:

NOTE

All the grounding cables are connected to the nearest pole or grounding bar. When there is no grounding bar, ground the feeder to the grounding strap or cable rack. The length of the grounding cable should not exceed 5 m.

- The place within 1 m from the pole and within 1.5 m from the base station for the outdoor base station
  - The place where the feeder is led down from the pole when the height of the pole is not more than 5 m and the distance between the pole and the base station is less than 5 m
  - The lower part of the feeder to the pole when the height of the pole exceeds 5 m
  - When the distance between the pole and the base station exceeds 20 m, add the grounding point at an interval of 20 m.
- The place near the antenna and outside the feeder window for the indoor base station
  - When the distance between the two grounding points exceeds 20 m, ground the feeder on the outdoor cable rack.

- The place where the feeder is led down from the pole when the height of the pole is not more than 5 m and the distance between the pole and the base station is less than 5 m
- If the height of the tower exceeds 5 m, add a grounding point under the antenna.

Figure 15-15 Grounding for the RF antenna mounted on the rooftop

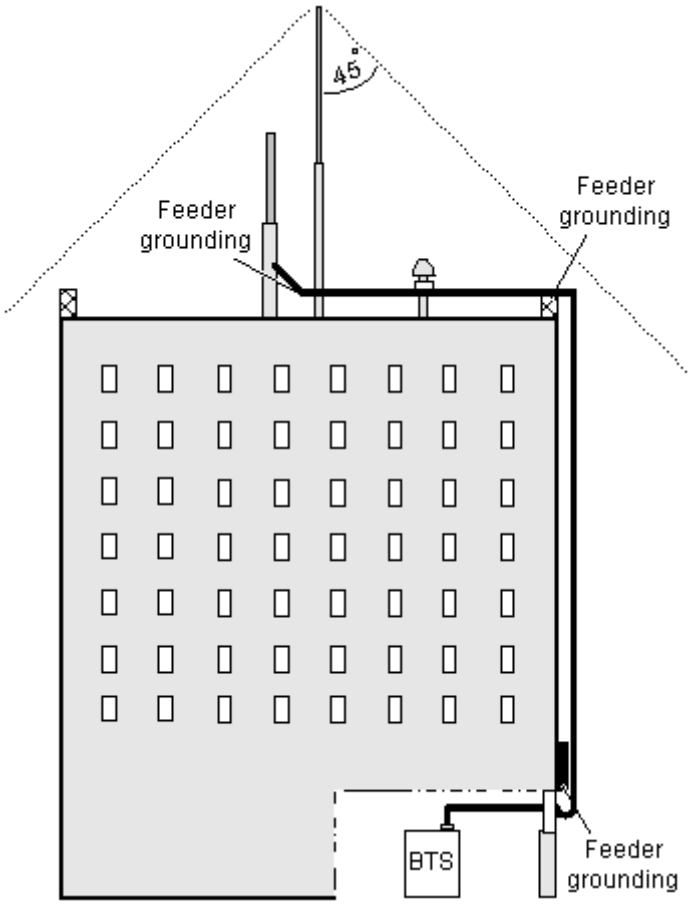

NOTE

The grounding point can be located at the middle point between the base station and the entrance of the equipment room or at the place convenient for operation on the cable rack, depending on the actual conditions.

15.3 Leading Feeders into the Equipment Room

The feeders should be led into the equipment room through the feeder window. This part describes how to lead the feeders into the equipment room through the 12-hole feeder window.

Context

Adhere to the following principles when leading the feeders into the equipment room:

- There are four large openings in a 12-hole feeder window. Each opening has three small holes and each hole holds one feeder.
- The feeders should be routed clockwise or anticlockwise according to the numbers on their engineering labels through the three small holes in the same opening.

- The feeders should be routed for the expansion in the future. Generally, you are only allowed to lead new feeders through the feeder window or to change the connection of jumpers on the cabinet during the expansion without changing the layout of existing feeders.
- The routing of the feeders in feeder window should facilitate the feeder layout on the cable rack and the connection between the feeders and the cabinet.
- The feeders should be parallel to each other.

It is recommended to route the feeders through the feeder window in the sequence, as shown in **Figure 15-16**.

Figure 15-16 Routing the feeders through the feeder window

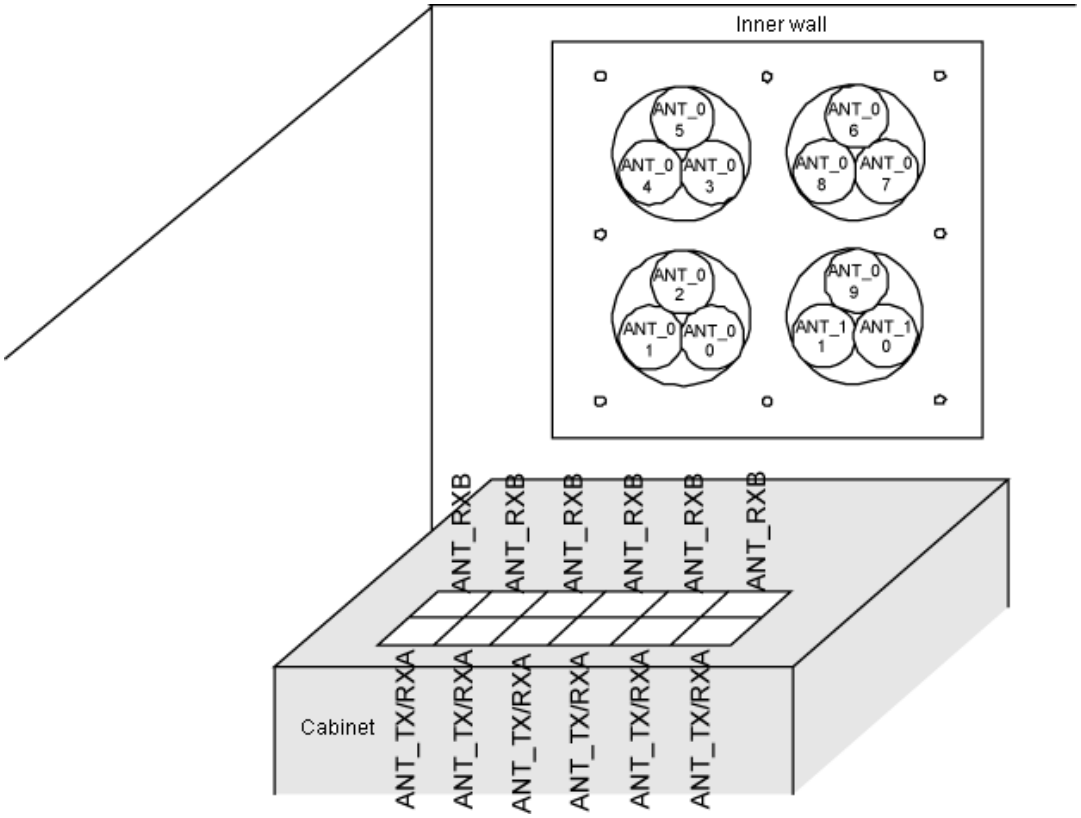

As shown in **Figure 15-16**, the antenna connectors at the top of the cabinet are identified by silkscreens, and the holes in the feeder window are identified by labels on the feeders.

For the base station in each configuration, you can lead the feeders into the equipment room through the feeder window by matching the silkscreens with the labels on the holes in the feeder window.

Procedure

Step 1 Lead feeders into the equipment room through the feeder window.

CAUTION

A person should be present in the room for assisting the operation to prevent damage to the indoor equipment.

Step 2 Make waterproof curves for the feeders outside the feeder window.

CAUTION

When the feeder window and the indoor cable rack are not at the same level, bend the feeders in a natural manner. The minimum bending radius of the feeder should be 20 times larger than the diameter of the feeder.

Step 3 Mount the sealing gasket and sleeve on the feeder window. Ensure that the glue-adding holes in the sealing sleeve face upwards.

Step 4 Cut the feeders to the required length and prepare connectors for the indoor feeders.

Step 5 Attach the label at the point 200 mm from the feeder connector by referring to **Labeling Signal Cables**.

----End